All Rights Reserved

Materials and specifications are subject to change without notice.
Featured machines in photos may include additional equipment.
See your XCMG dealer for available options.

www.xcmg.com

XCMG Regional Departments:

Europe	(+86-516) 87739703 87739218 87739537	Africa	(+86-516) 87735009 87739222 87739283
West Asia & North Africa	(+86-516) 87739702 87739202 87739223	Central Asia	(+86-516) 87739236 87739239 87739538
Asia-Pacific	(+86-516) 87739128 87739500 87739529	America	(+86-516) 87739285 87739551 87739710

XUZHOU CONSTRUCTION MACHINERY GROUP IMP. & EXP. CO., LTD
Add: No.1, Tuolanshan Road, Xuzhou Economic Developing Zone, Jiangsu, China 221004
Fax: (+86-516) 87739230
E-mail: export@xcmg.com

XE35E

Hydraulic Excavator

Euro Stage V

Advanced Configuration

Ecological and economical

- Yanmar engine compliant with Euro stage V and North American Tier 4F Emission Standard
- The excellent matching of hydraulic system and engine is more powerful and fuel saving

Excellent after-sales service

- Global after-sales service system and quick response mechanism
- Real-time technical consultation and maintenance

Multiple application

- Tailless design, small radius of slewing to achieve small space flexible operation
- Multiple additional configuration to adapt to a variety of operating requirements

Convenient maintenance

- Advanced maintenance design concept helps your maintenance easier without dead angle

Comfortable operating experience

- Air Conditioner and Heator to ensure the appropriate temperature
- Toughened glass cockpit with good safety view
- Detailed design concept improves comfort

Safe and durable

- Integrated body design
- Strengthened Structure, Stress dispersing
- Upgrade undercarriage structure to improve load bearing performance

Ecological And Economical

Power system

- Yanmar engine which compliant with Euro stage V and North American Tier 4F Emission Standard can effectively reduce fuel consumption and emission, the mechanical oil-injection pump has more reliable performance, sufficient reserve of low speed torque and strong power.

Hydraulic system

- Key hydraulic components adopt up-to-date technology, featuring hydraulic system with low energy consumption, fast response speed, accurate control and small impact so that strong digging force and excellent operating efficiency are ensured. The power of engine and hydraulic system match perfectly so that the engine can work in optimum fuel consumption level to improve fuel efficiency and save operational cost.

Multiple Application Conditions

- The adoption of tailless design and super short slewing radius ensures the machine to work in narrow work conditions.

- The left and right swing angle of working device is respectively 75° and 50°, it can realize complex operation together with upper structure slewing to ensure that the digging is parallel with wall surface in narrow space through the cooperation of superstructure slewing so as to easily deal with various operating conditions.

Comfort And Safe

- Spacious cab leading at the forefront of the same level products. The air conditioner, file pockets, seat belts, cup holders and reserve power supply greatly enhance comfort and convenience.

- The cab, base plate and console are integrated by adopting advanced welding technology, which greatly reduces indoor noise and ensures the comfort of operator.

- Visual dashboard monitors the whole machine status in real-time, ensures more smooth operation.

- Large area of tempered glasses with high strength are equipped on the cab, which ensures the strength meanwhile improves vision, floodlight is equipped on the roof of the cab to ensure accurate and safe operation at night.

- Strengthened boom and arm, adjusted structure and stress dispersing will greatly improve lifespan.

- With X-frame undercarriage structure, reinforced plate and enlarged box cross section, its bearing performance is greatly improved.

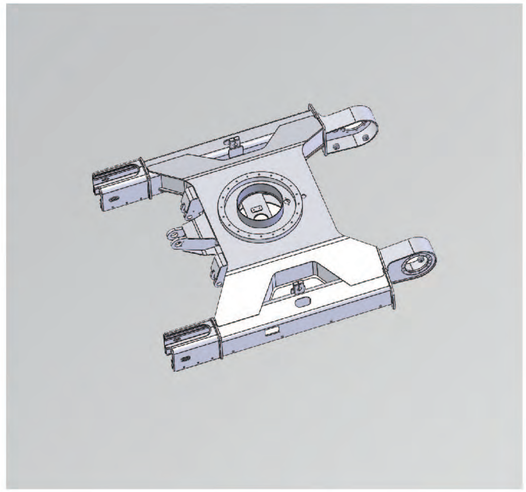

Maintenance And Service

- The cab can be tilted forward for 35°, the engine and its accessories, main valve, slewing motor and central rotary joint are easy to be maintained.

- After the cab is tilted, the generator, start motor, muffler, electric and hydraulic systems can be maintained rapidly cooperated with fully-opened rear hood, there is no dead angle within 360 degrees for maintenance of whole machine.

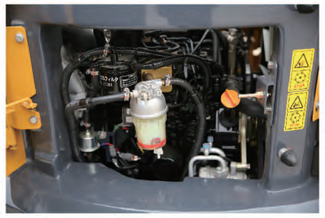

- When the right hood opened, the air conditioner filter, coolant filling port, auxiliary water tank, power master switch, air conditioner dryer and battery can be maintained conveniently, which saves both time and labour.

- A wide range of after - sales service system, quick - response rescue mechanism to ensure that you use at ease.

Standard Configuration

	Name of equipment	XE35E
Engine	Engine model	3TNV88F
	Emission level	Euro V、North American 4F
	Air cleaner (equipped with air cleaner blockage indicator)	
	Double filter element of air filter	
	Automatic idle system	
	Collector type engine oil filter	
	Collector type fuel main filter	
	Fan shroud	
	Radiator auxiliary water tank	
	Oil-water separator	
	Alternator	
Hydraulic System	Control valve with LS overflow valve	
	Pilot filter	
	Oil suction filter	
	Accumulator	
	Arm flow regeneration	
	Hydraulic oil ISO VG 46	
	Spare valve plate	
Cab and interior trim	AM - FM radio with digital display	
	All - weather soundproof steel structure cab	
	Beverage cup holder	
	Two stereo speakers	
	Engine key switch	
	Emergency hammer	
	Fire extinguisher support	

Cab and interior trim	Front window washer
	Cleanable floor mat
	Footrest board
	Luxury seat
	Openable front upper windshield
	Removable front and lower windshield
	Tempered glass sliding door and window
	Intermittent windscreen wiper
	Seat belt
	Control handle
	Travel control pedal with detachable manual control lever
	Coat and hat hook
	High and low gears shift
	Air conditioning system
	Cigarette Lighter/Standby Power Supply
	Top sunroof
	Internal lighting in the cab
	Document bag
	Rearview mirror
	LCD liquid crystal monitor
Safety and security configuration	Driving door locks and cabin locks
	Alarm horn
	Parking brake for walking
	Rotary parking brake
	Battery circuit breaker
	Pusher retaining valve
	Explosion-proof valve for boom and arm pipeline
	Rotary alarm lamp

Safety and security configuration	Hydraulic safety locking lever
	Emergency escape hammer
	Left and right rearview mirrors
	Front work light
	Counterweight reflector
	Falling object protection structure (FOPS)
Chassis system and shield	Track tensioning mechanism
	Bottom frame traction ring
	rubber belt track
	Bottom sealing plate of chassis
	Walking motor sealing plate
	Track clamp
	Bulldozer shovel
	Supporting chain wheel and supporting wheel
Equipment	Boom
	Arm
	Bucket 0.11m3 (ISO full bucket)
Electrical system	Battery (1× 64Ah)
	12V power interface
	Engine cooling water temperature display
	Fuel level display
	Engine speed display
	Working hour meter
	Engine oil pressure, engine overheat alarm
	Charging indication
	Air filter clogging alarm
	Engine warm-up indication
	Hydraulic oil temperature alarm

Lighting lamp	Left boom working light
	Working light mounted in the cab
Counterweight	Counterweight

Optional Configuration

	Name of equipment	XE35E
Hydraulic system	Hydraulic pipeline: breaking hammer	
	Hydraulic oil ISO VG 32, 68	
Cab and interior trim	Fire extinguisher	
Equipment	Quick coupler	
	Hydrauli breaker	
	Hydraulic thumb pliers	
Electrical system	12V cigarette lighter	

Main Specifications

Item		Unit	Parameters
Model		/	XE35E
Operation Weight		Kg	4200
Bucket Capacity		m³	0.12
Engine	Engine Model	/	3TNV88F
	Direct Injection	/	√
	Four Strokes	/	√
	Water Cooling	/	√

Item		Unit	Parameters
Engine	Turbocharging	/	×
	No.of Cylinders	/	3
	Rated Power	kw/rpm	18.2/2200
	Maximum Torque/Speed	N.m	85.3-94.2/1320
	Displacement	L	1.642
Main Performance	Travel Speed	km/h	3.6/2.2
	Swing Speed	r/min	9
	Gradeability	°	30
	Ground Pressure	kPa	36.6
	Bucket Digging Force	kN	28.6
	Arm Digging Force	kN	20.3
	Maximum Tractive Force	kN	31.6
Hydraulic System	Rated Flow of Main Pump	L/min	108
	Working Pressure	MPa	22
	Travel System Pressure	MPa	21
	Swing System Pressure	MPa	16.7
	Pilot System Pressure	MPa	3.9
Oil Capacity	Fuel Tank Capacity	L	40
	Hydraulic Tank Capacity	L	45
	Engine Oil Capacity	L	7
Standard	Length of Boom	mm	2560
	Length of Arm	mm	1350
	Bucket Capacity	m³	0.12

Dimensions

	Item	Unit	Parameters
Overall Dimensions	A Overall Length	mm	4970
	B Overall Width	mm	1740
	C Overall Height	mm	2535
	D Width of Platform	mm	1480
	E Total Width of Chassis	mm	1740
	F Track Shoe Width	mm	300
	G Crawler base	mm	1721
	H Track Gauge	mm	1440
	I Counterweight Clearance	mm	587
	J Minimum Ground Clearance	mm	297
	Dozer Blade(Width/Height)	mm	1740×358

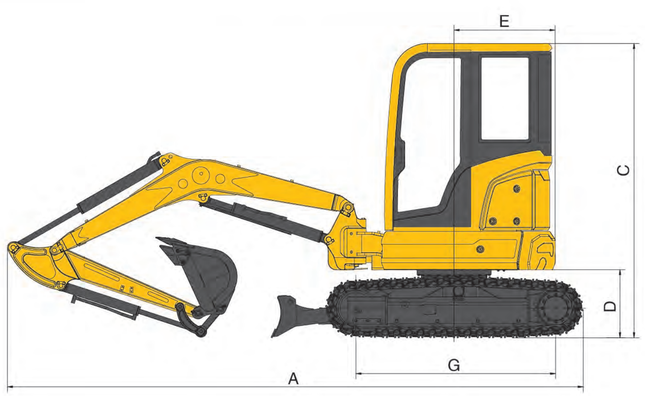

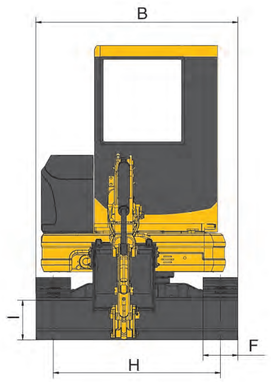

Working Range

	Item	Unit	Parameters
Working Range	A Maximum Digging Height	mm	5000
	B Maximum Dumping Height	mm	3600
	C Maximum Digging Depth	mm	3060
	D Maximum Vertical Wall Digging Depth	mm	2260
	E Maximum Digging Radius	mm	5300
	F Minimum Swing Radius	mm	2170
	G Minimum Tail Swing Radius	mm	870
	Maximum Dozer Lifting Height	mm	305
	Maximum Dozer Cutting Depth	mm	360

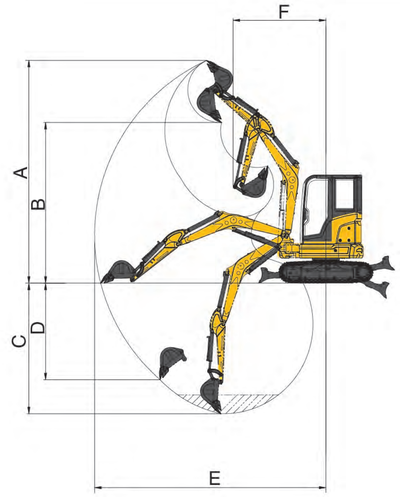

Lifting Capacity

Lifting point height (m)	Rated lift capacity – Straight ahead (back) (kg)					Rated lift capacity – over-side (kg)				
	Lifting point radius (m)				Lifting capacity at maximum radius	Lifting point radius (m)				Lifting capacity at maximum radius
	1	2	3	4		1	2	3	4	
4			*816.9		*748.8			*816.9		*748.8
3			*830.1	724.1	*634.4			*830.1	*806.8	*634.4
2		1921.5	1061.6	714.3	593.4		*1957.3	*1094.8	807.1	*627.5
1			1016.5	697.2	568.8			1170.1	789.4	643.5
Ground		*1193.1	992.9	685.1	591.1		*1193.1	1145.2	784.7	666.9
-1		1794.8	991.6	686.3	682.9		2166.6	1143.8	778.1	774
-2		*1299.8			*778.9		*1299.8			*778.9

Capacities marked with an asterisk(*) are limited by hydraulic capacities.